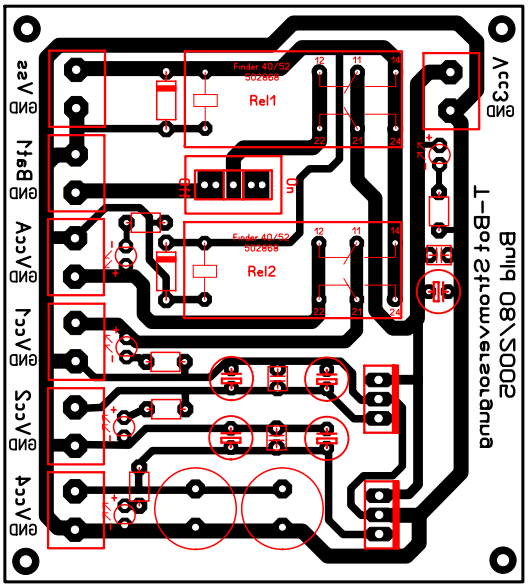
Vcc3
GND
T-Bot Stromversorgung
Build 08/2005
Finder 40/52
302608
Rel1
Finder 40/52
302608
Rel2
Vcc4
GND
Vcc2
GND
Vcc1
GND
Vcc3
GND
Bat1
GND
Vs
GND